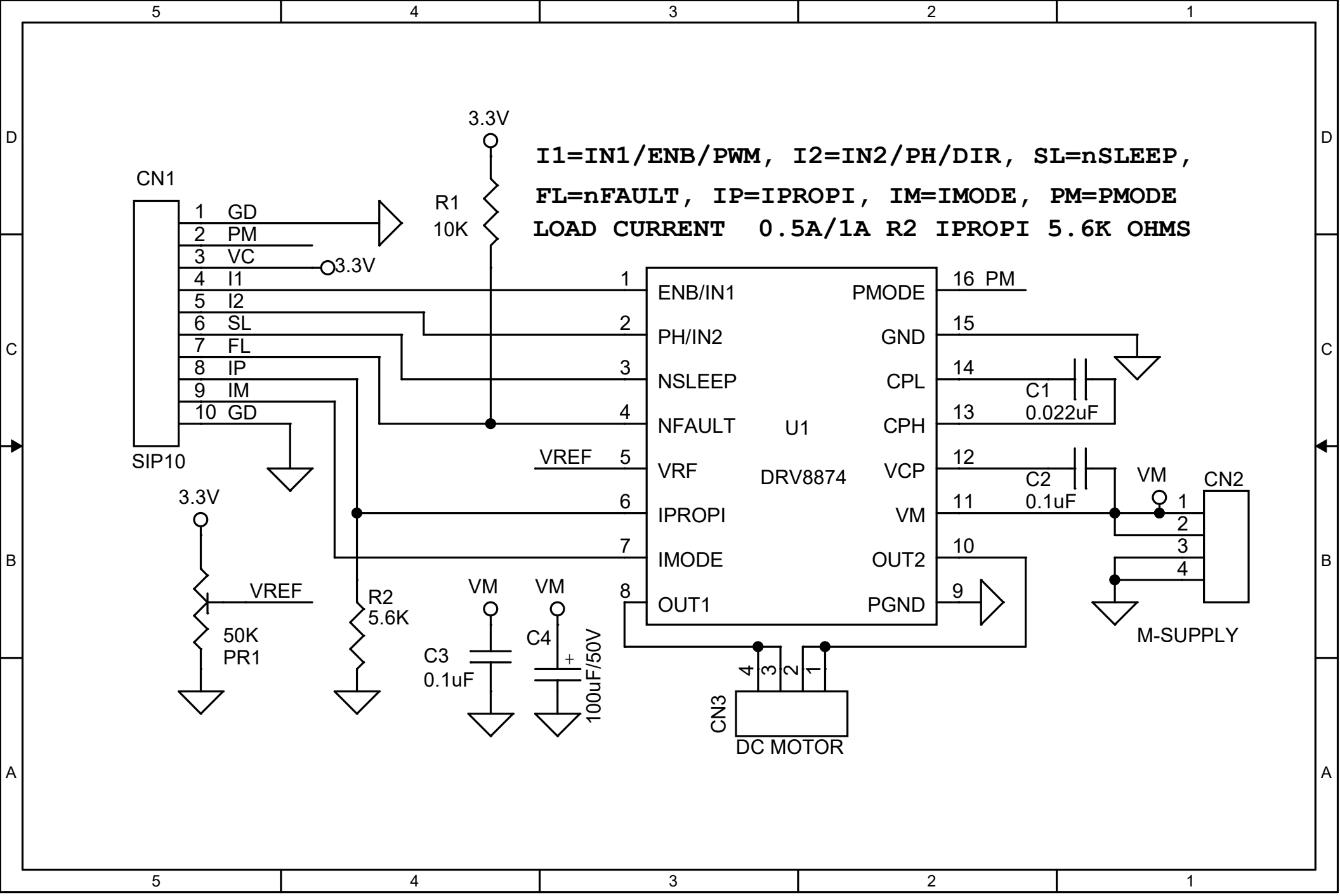
I1=IN1/ENB/PWM, I2=IN2/PH/DIR, SL=nSLEEP,
FL=nFAULT, IP=IPROPI, IM=IMODE, PM=PMODE
LOAD CURRENT 0.5A/1A R2 IPROPI 5.6K OHMS
CN1
1 GD
2 PM
3 VC
4 I1
5 I2
6 SL
7 FL
8 IP
9 IM
10 GD
SIP10
3.3V
R1
10K
ENB/IN1
PH/IN2
NSLEEP
NFAULT
VRF
IPROPI
IMODE
OUT1
PMODE
GND
CPL
CPH
VCP
VM
OUT2
PGND
U1
DRV8874
VREF
C1
0.022uF
C2
0.1uF
CN2
M-SUPPLY
50K
PR1
R2
5.6K
C3
0.1uF
C4
100uF/50V
CN3
DC MOTOR