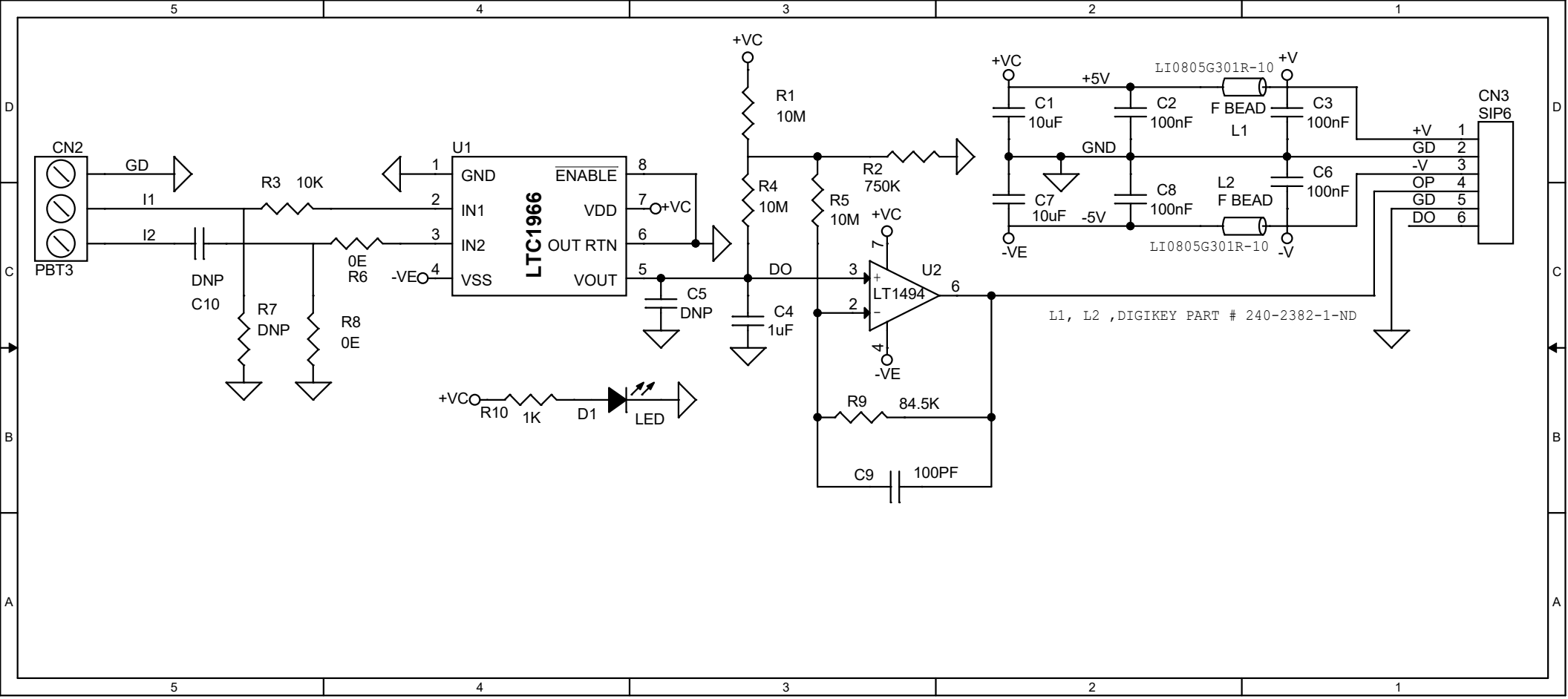
CN2
PBT3
GD
I1
I2
R3 10K
DNP
C10
R7
DNP
0E
R6
R8
0E
U1
LTC1966
GND
IN1
IN2
VSS
ENABLE
VDD
OUT RTN
VOUT
-VE
+VC
C5
DNP
R1
10M
R4
10M
C4
1uF
DO
R5
10M
R2
750K
U2
LT1494
-VE
R9 84.5K
C9 100PF
+VC
R10 1K
D1
LED
+VC
C1
10uF
C7
10uF
-VE
+5V
-5V
C2
100nF
C8
100nF
LI0805G301R-10
F BEAD
L1
L2
F BEAD
LI0805G301R-10
+V
-V
C3
100nF
C6
100nF
GND
CN3
SIP6
+V 1
GD 2
-V 3
OP 4
GD 5
DO 6
L1, L2 ,DIGIKEY PART # 240-2382-1-ND