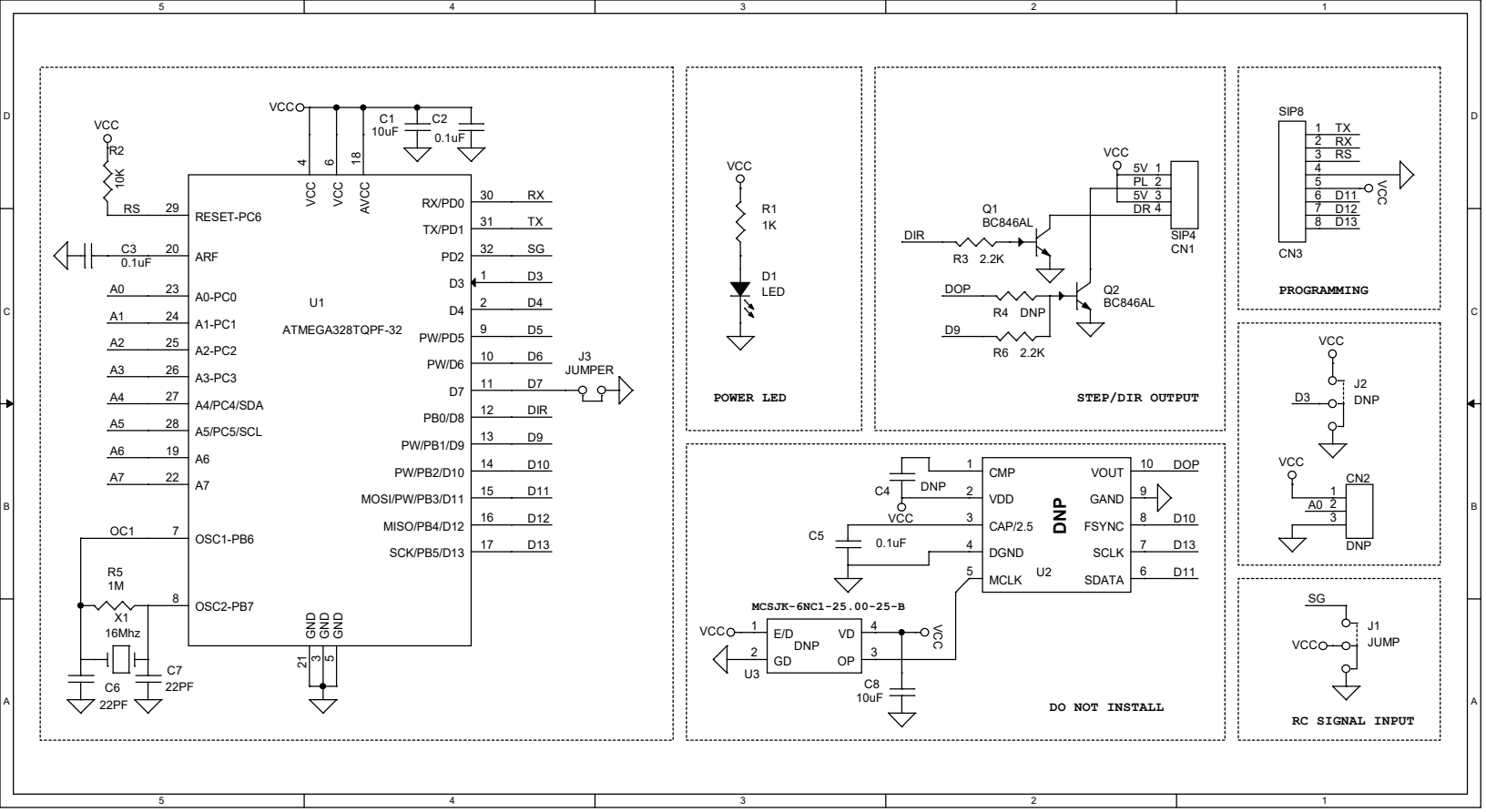
VCC
R2
10K
RS 29
RESET-PC6
C3
0.1uF
20
ARF
A0 23
A0-PC0
A1 24
A1-PC1
A2 25
A2-PC2
A3 26
A3-PC3
A4 27
A4/PC4/SDA
A5 28
A5/PC5/SCL
A6 19
A6
A7 22
A7
OC1 7
OSC1-PB6
R5
1M
8
OSC2-PB7
X1
16Mhz
C6
22PF
C7
22PF
VCC
C1
10uF
C2
0.1uF
4
6
18
VCC
VCC
AVCC
U1
ATMEGA328TQPF-32
GND
GND
GND
21
3
5
RX/PD0 30 RX
TX/PD1 31 TX
PD2 32 SG
D3 1 D3
D4 2 D4
PW/PD5 9 D5
PW/D6 10 D6
D7 11 D7
PB0/D8 12 DIR
PW/PB1/D9 13 D9
PW/PB2/D10 14 D10
MOSI/PW/PB3/D11 15 D11
MISO/PB4/D12 16 D12
SCK/PB5/D13 17 D13
J3
JUMPER
VCC
R1
1K
D1
LED
POWER LED
VCC
5V 1
PL 2
5V 3
DR 4
SIP4
CN1
Q1
BC846AL
DIR
R3 2.2K
DOP
R4 DNP
Q2
BC846AL
D9
R6 2.2K
STEP/DIR OUTPUT
SIP8
1 TX
2 RX
3 RS
4
5
6 D11
7 D12
8 D13
VCC
CN3
PROGRAMMING
VCC
J2
D3
DNP
VCC
CN2
1
A0 2
3
DNP
C4
DNP
VCC
C5
0.1uF
1 CMP
2 VDD
3 CAP/2.5
4 DGND
5 MCLK
U2
DNP
VOUT 10 DOP
GAND 9
FSYNC 8 D10
SCLK 7 D13
SDATA 6 D11
MCSJK-6NC1-25.00-25-B
VCC 1
2
U3
E/D
DNP
GD
VD 4
OP 3
VCC
C8
10uF
DO NOT INSTALL
SG
J1
VCC
JUMP
RC SIGNAL INPUT